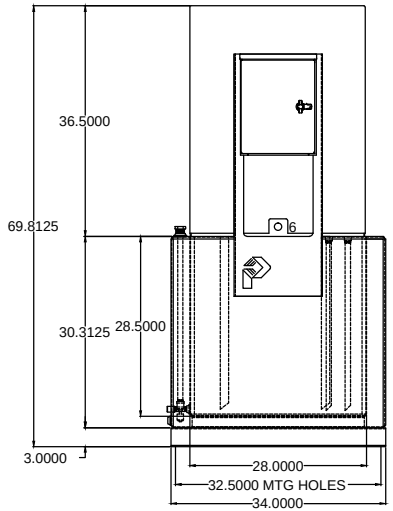

FRONT VIEW

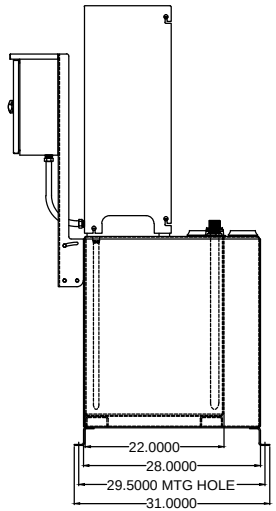

RIGHT SIDE VIEW

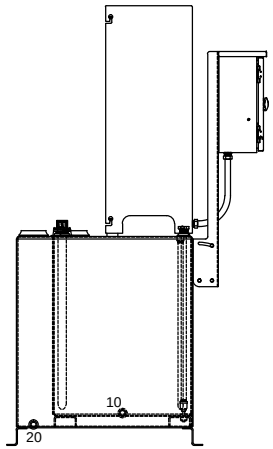

LEFT SIDE VIEW

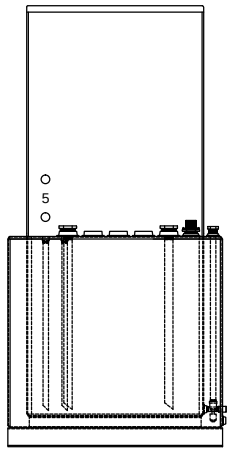

REAR VIEW

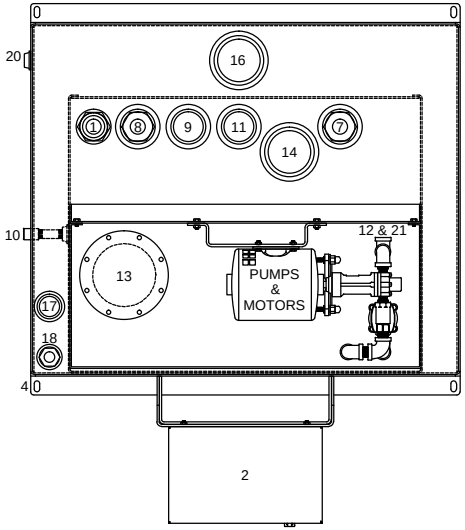

PLAN VIEW
(SCALE: 2X)

	DESCRIPTION OF EQUIPMENT
1	1 1/2" NPT FOR FUEL LEVEL GAUGE
2	CONTROL PANEL ENCLOSURE
3	REMOVABLE COVER(WEATHER PROOF)
4	7/16" X 7/8" SLOTTED MOUNTING HOLE TO FLOOR
5	FUEL CONNECTION TO PUMPS
6	ELECTRICAL INLET
7	2" x 1" NPT PIPE STEM FOR ENGINE SUPPLY OR RETURN
8	2" x 1" NPT PIPE STEM FOR ENGINE SUPPLY OR RETURN
9	2" NPT OVERFLOW TO MAIN STORAGE TANK
10	1/2" NPT DRAIN FOR TANK (PLUGGED)
11	2" NPT VENT FOR TANK TO ATMOSPHERE
12	1/2" NPT FUEL INLET
13	INSPECTION PLATE W/FLOAT SWITCHES
14	3" NPT U/L EMERGENCY RELIEF VENT FOR TANK
16	3" NPT U/L EMERGENCY RELIEF VENT FOR DOUBLE WALL
17	1 1/4" NPT DOUBLE WALL INSPECTION FITTING
18	1" x 1/2" NPT FOR LEAK DETECTOR SWITCH
20	1/2" NPT DRAIN FOR DOUBLE WALL (PLUGGED)
21	1/2" NPT FUEL OUTLET

CONSTRUCTION NOTES

TANK AND DOUBLE WALL-12 GAUGE STEEL

7/16" X 7/8" MOUNTING HOLE TO FLOOR (TYP. 4X)

PY60 U/L LISTED DOUBLE WALL

PRYCO INC.
MECHANICSBURG ILLINOIS

DRAWN BY: DJW	SEE DRAWING: NONE
CHECKED BY: RJW	SCALE: 1=28
DATE: 04-13-2018	DWG. NUMBER: 34S060d000

34 SERIES